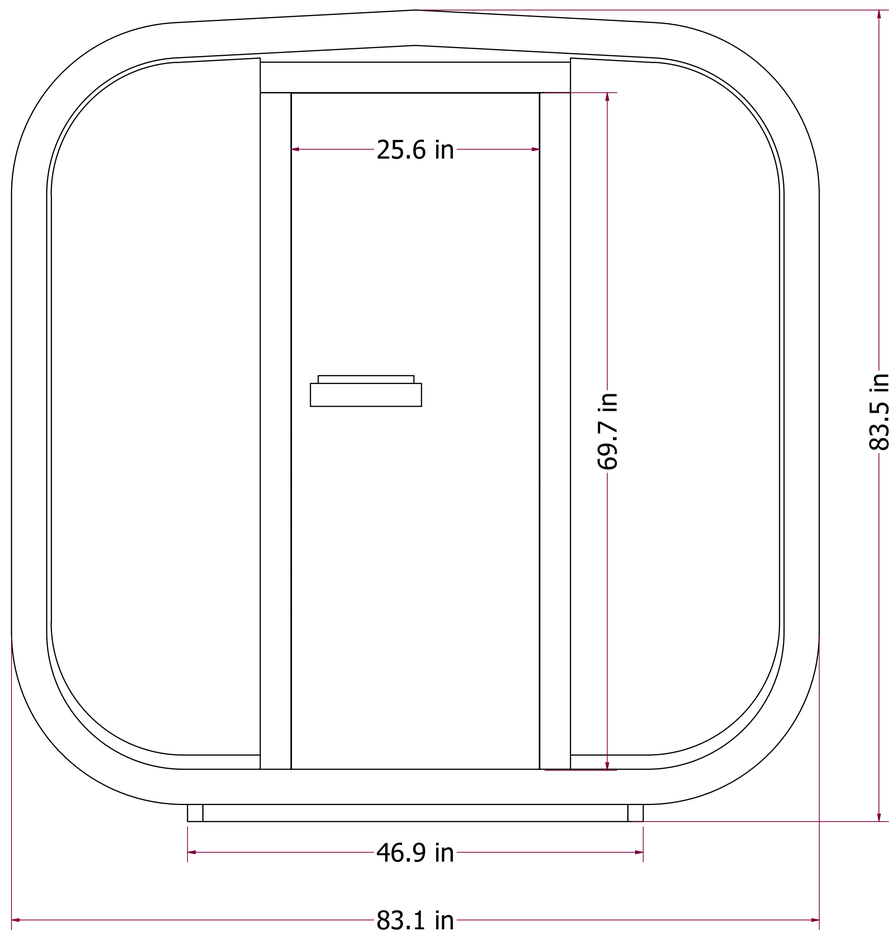
25.6 in
69.7 in
83.5 in
46.9 in
83.1 in

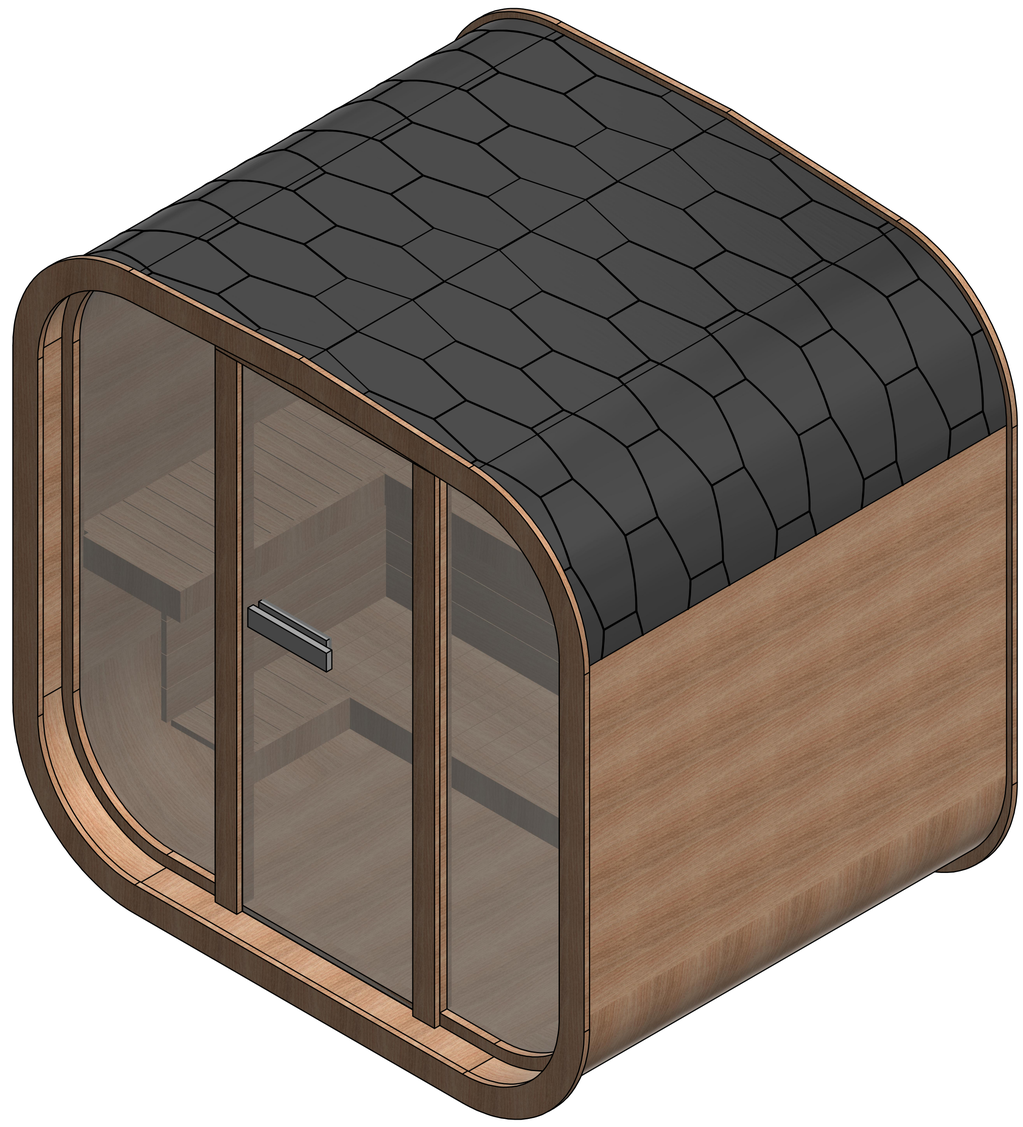

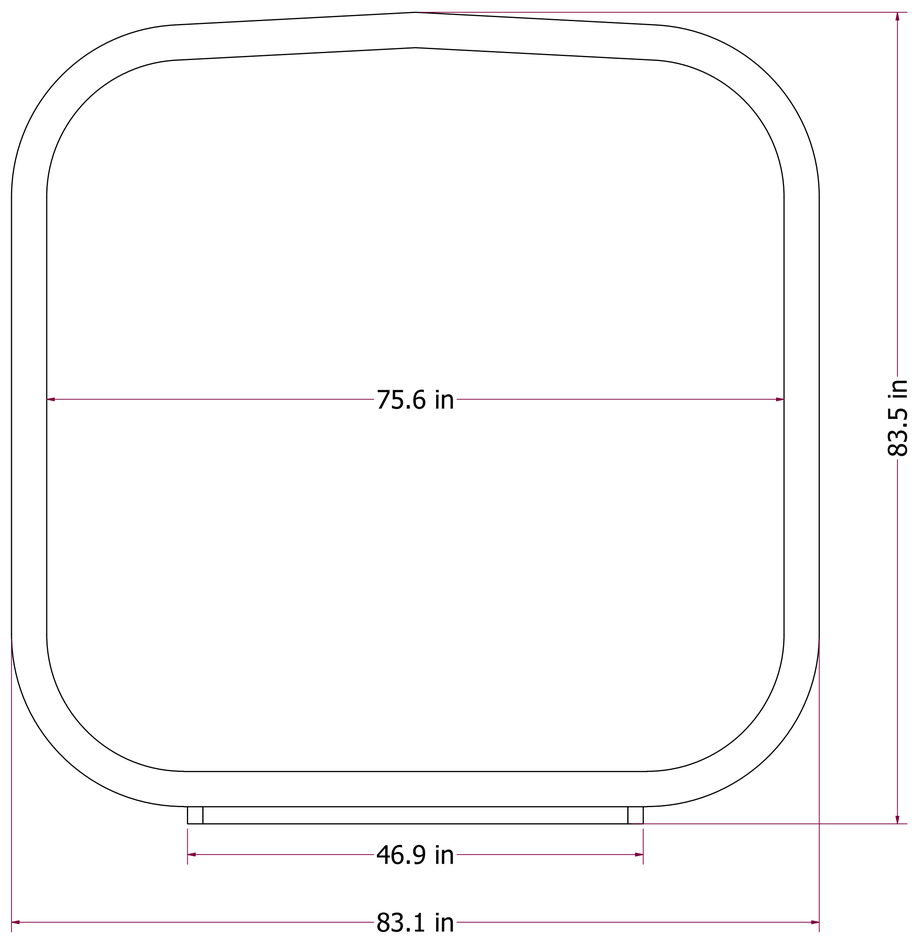
75.6 in
83.5 in
46.9 in
83.1 in

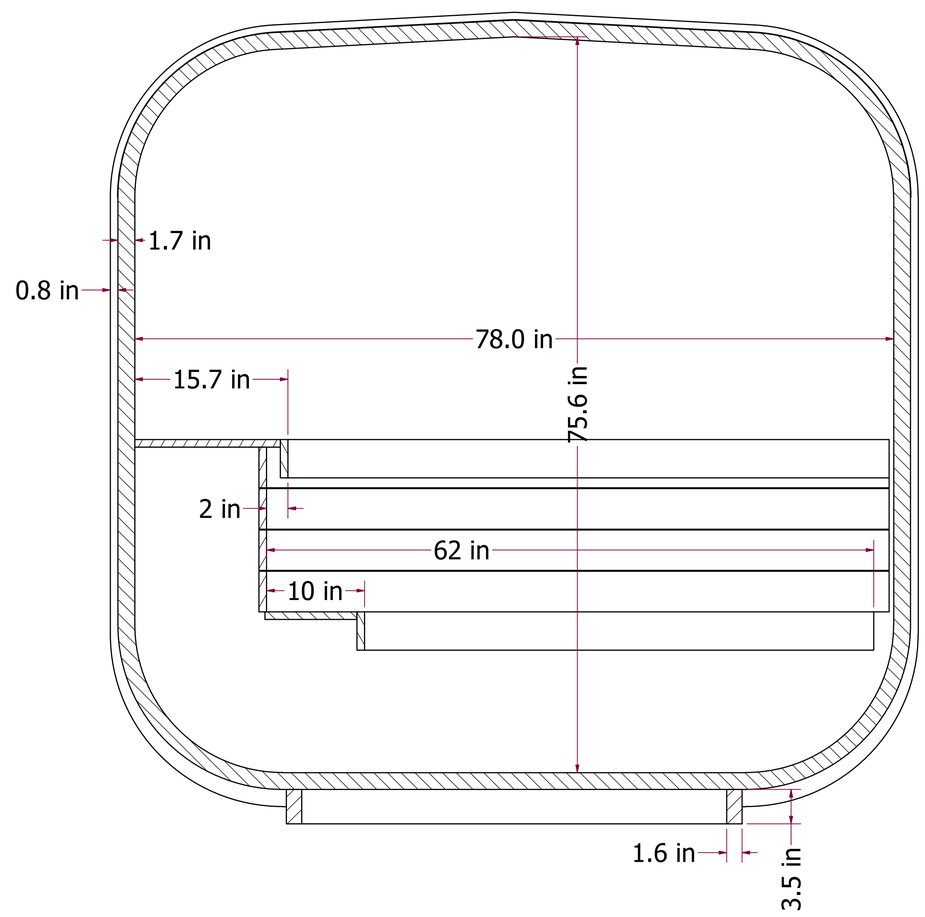
1.7 in
0.8 in
78.0 in
15.7 in
75.6 in
2 in
62 in
10 in
1.6 in
3.5 in

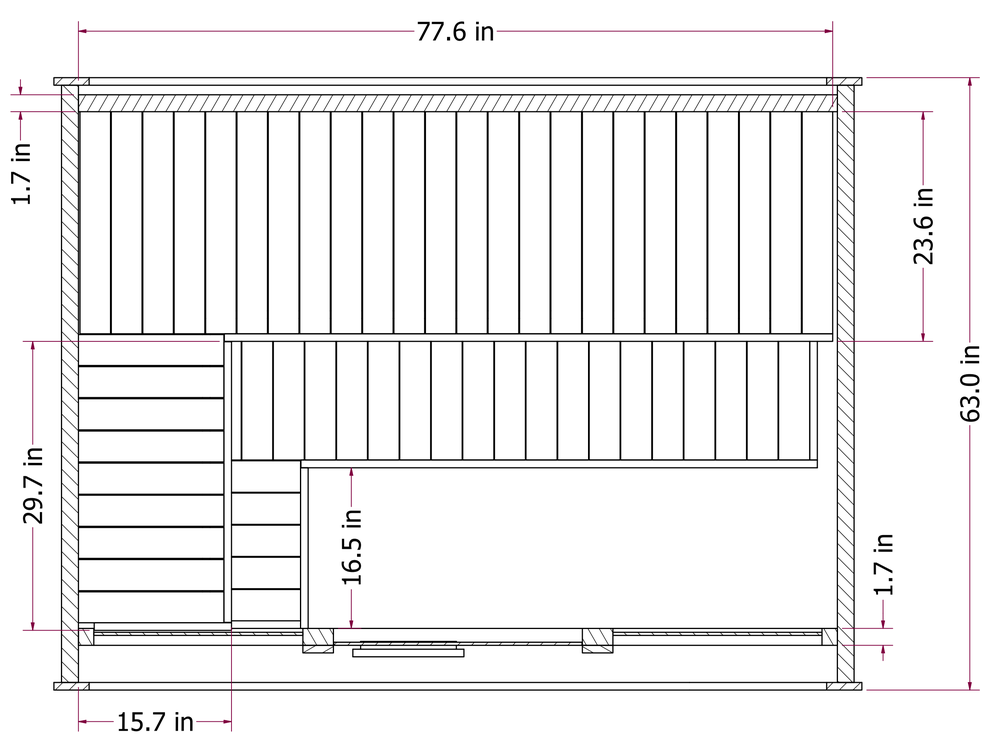
77.6 in
1.7 in
23.6 in
63.0 in
29.7 in
16.5 in
1.7 in
15.7 in

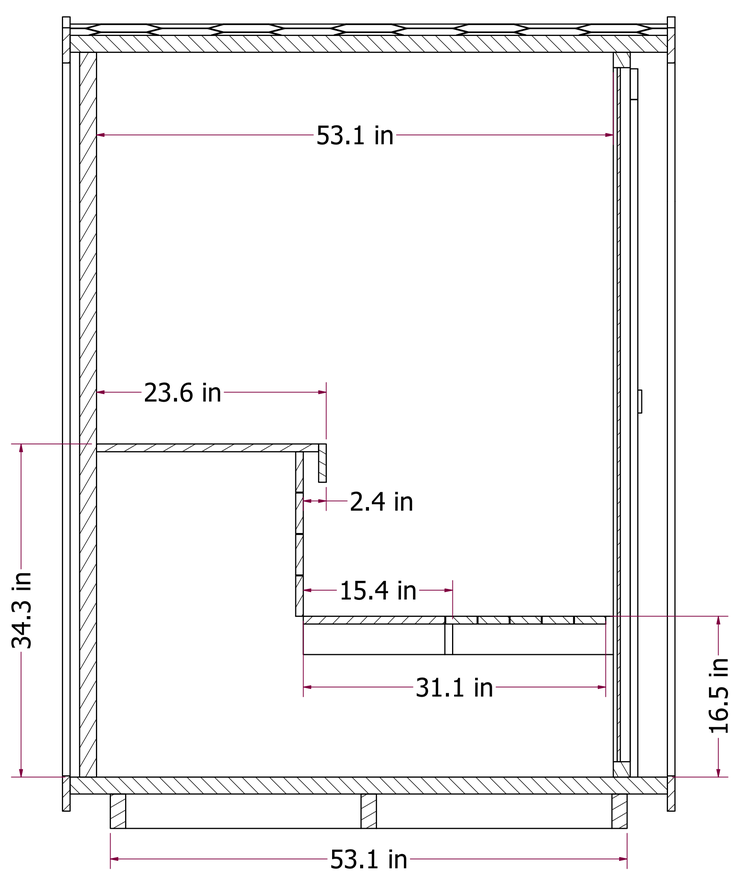
53.1 in
23.6 in
2.4 in
34.3 in
15.4 in
31.1 in
16.5 in
53.1 in